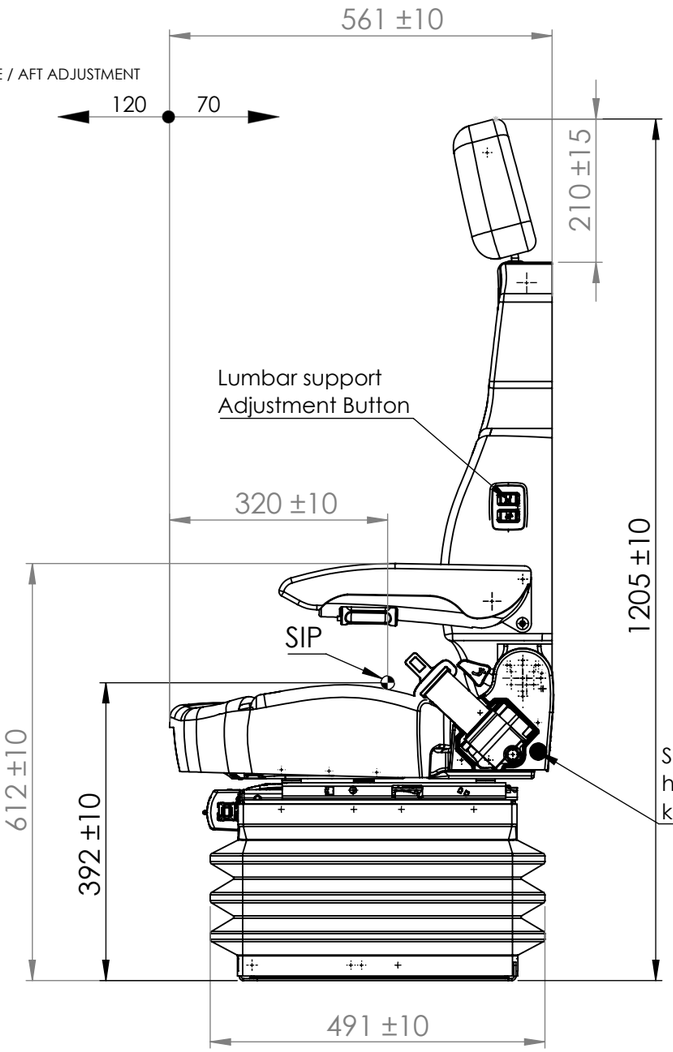

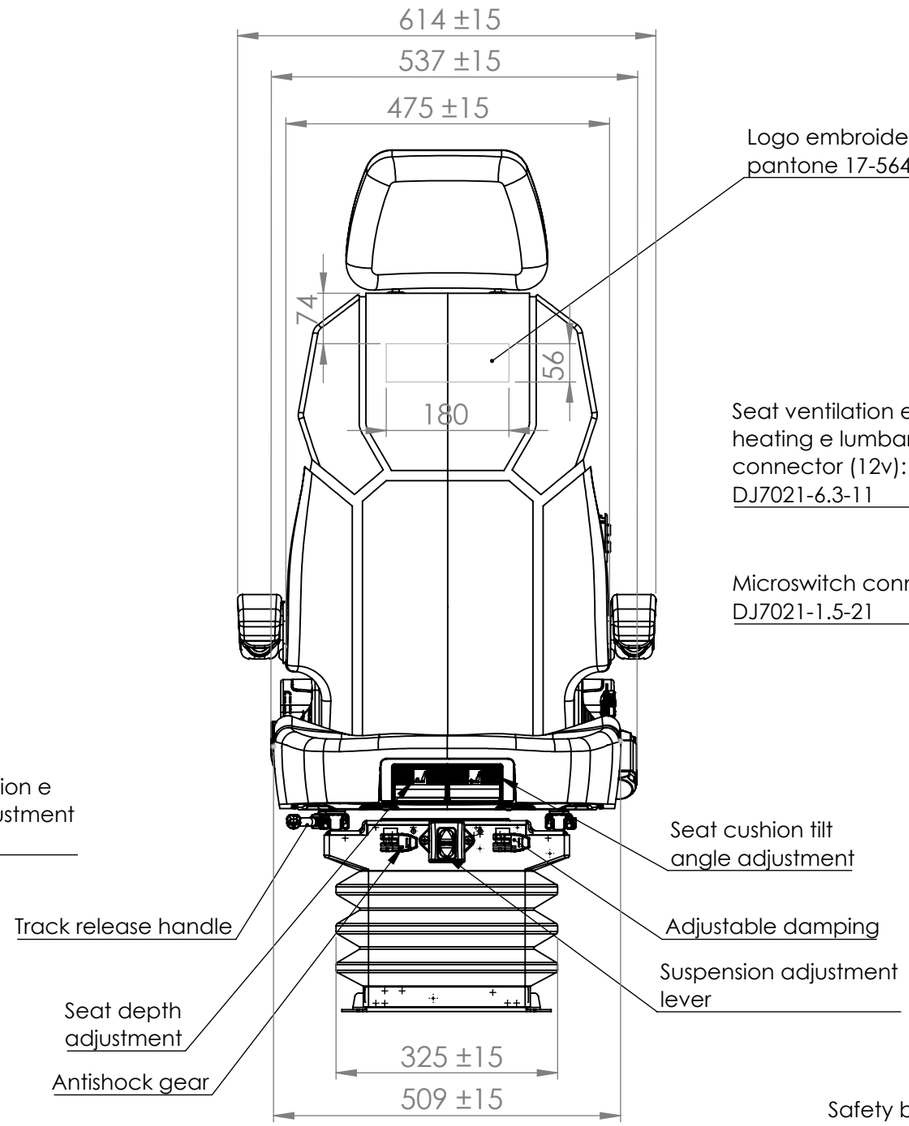

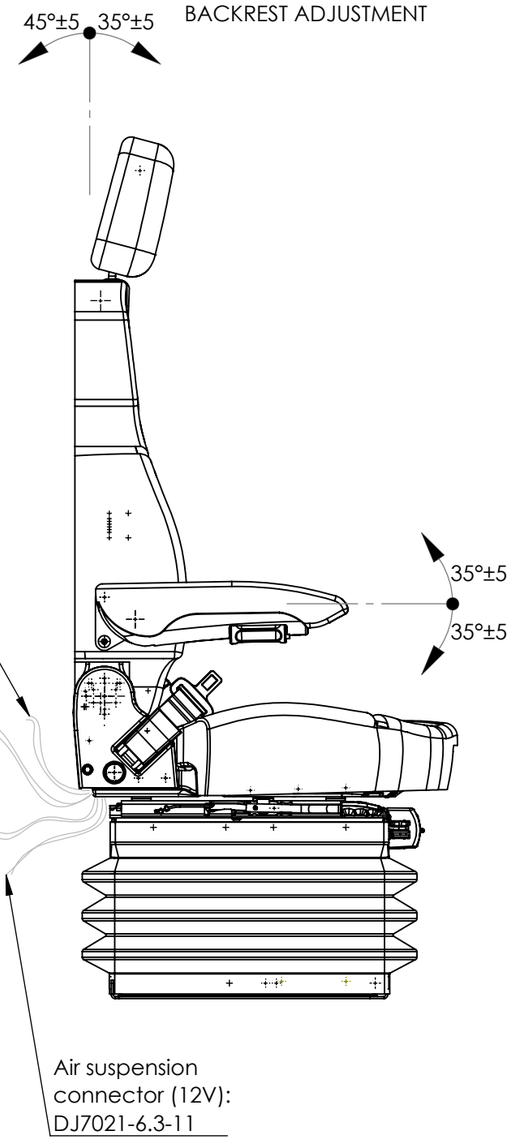

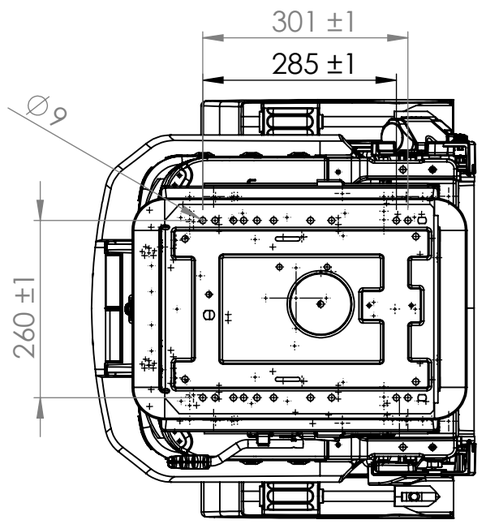

Technical Specifications:

1. Seat includes automatic safety belt, adjustable armrest, slide rail, pneumatic suspesnion (12V), adjustable headrest, mircoswitch, Seat Ventilation & Heating (12V), Lumbar Support (12V), Black fabric.
2. Slide rail left-right mounting spacing: 328mm. Slide rail pitch: 10mm. Forward travel: 120mm. Rearward travel: 70mm.
3. Backrest angle adjustment range: Forward 35° ±5°, backward 45° ± 5°.
4. Seat suspension travel: ±45 (±10) mm. higher adjustment: ±30(±5)mm. Drawing shows suspension in centered position.
5. Seat depth adjustable in 4stages, each stage 17.5mm travel, total travel 52.5mm. The tilt angle is adjustable in 3 steps, with each step providing 2.5° of adjustment.
6. The armrests feature stepless adjustment, allowing ±35° of angle adjustment. The drawing shows the centered position.
7. This seat complies with ISO 5353 (Earth-moving machinery - Driver seat reference points).
8. Weight adjustment range: 50-130 kg.

PRE-TRATTAMENTO SUPERF. (1st SURF. TREATMENT)		TRATTAMENTO SUPERF. FINALE (LAST SURF. TREAT.)			QUANTITA' (Q.TY)	RUGOSITA' SUPERF. (SURF. ROUGHN.)	
TRATT. TERMICO (HEAT TREATMENT)		PESO GREZZO (RAW W.) (Kg.)	PESO FINITO (FINAL W.) (Kg)		FOGLIO (SHEET)	[1.6 3.2 6.3]	
TOLLERANZE GENERALI CARP. (GENERIC CARPENTERY TOLERANCES) :			SMUSSI NON QUOT : 1X45° - RAGGI : R0,5 (CHAMFERS WITHOUT TOL : 1 X 45° - FILLETS : R0,5)				
CESOIA (SHEARING), PIEGA (BENDING) E OSSITAGLIO (OXYCUTTING) : ± 1 mm - SALDATURA (WELDING) : ± 2 mm - PIEGATURA (BENDING) : ± 1°							
DIM LIN E ANG (LIN. & ANG. DIM.)	F	FINE	H	TOLL. GEOMETR. (GEOM. TOLS.)	GRADO DI PREC. PER QUOTE LINEARI E ANGOLARI SENZA TOLLERANZA SECONDO UNI-EN 22768-1 (PREC. LEVEL FOR LINEAR AND ANGULAR DIMENSIONS WITHOUT TOL. ACCORDING UNI-EN 22768-1)		
	M	MEDIA (MEDIUM)	K				
	C	GROSSOLANA (COARSE)	L		GRADO DI PREC. PER TOLLERANZE GEOMETRICHE GENERALI SECONDO UNI-EN 22768-2 (PREC. LEVEL FOR GENERIC GEOMETRIC TOL. ACCORDING UNI-EN 22768-2)		
	V	MOLTO GROSSOLANA (VERY COARSE)	-				
DISEGNATO (DRAWN) : Malaguti					MATERIALE (MATERIAL) :		A3
CONTROLATO (CHKD) : Malaguti					DESCRIZIONE (DESCRIPTION) : //		
SEAT INDUSTRIES CAMPAGNOLA (RE) - ITALY					COD. ATRZ. (TOOL REF.) : --		CODICE (REF.) : Advance
					DATA (DATE) 15/10/2026	SCALA (SCALE) 1:5	